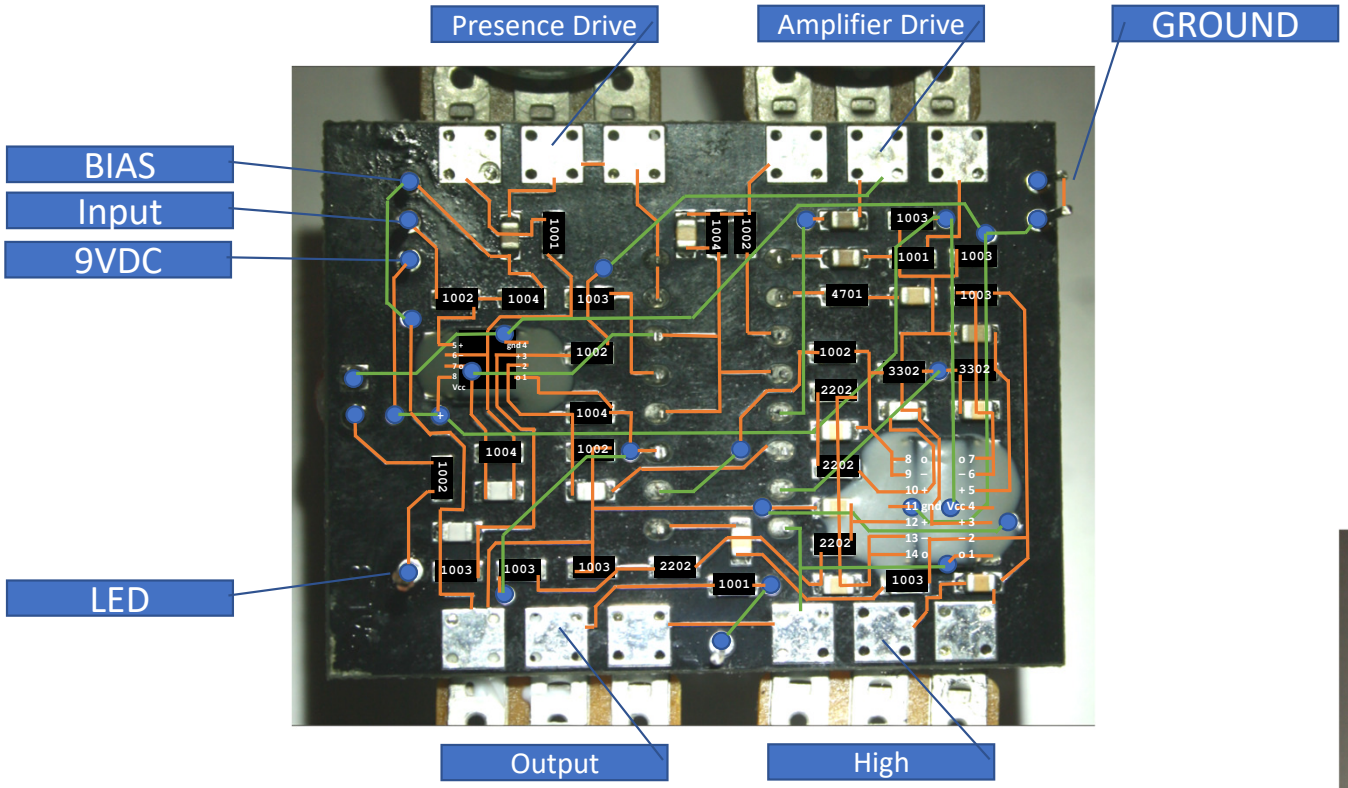

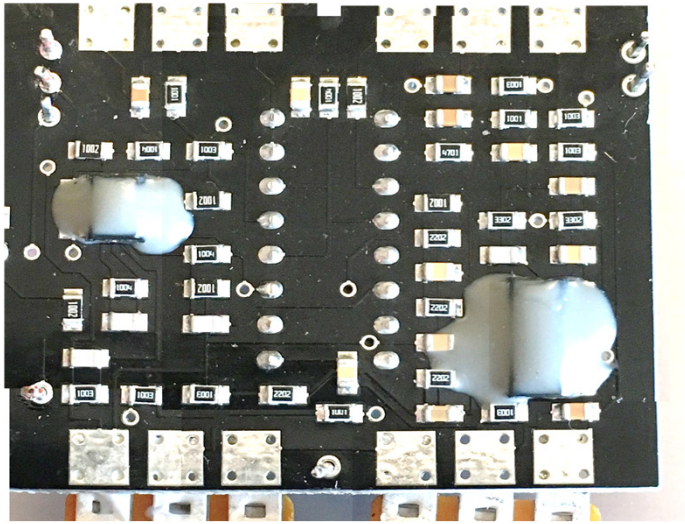

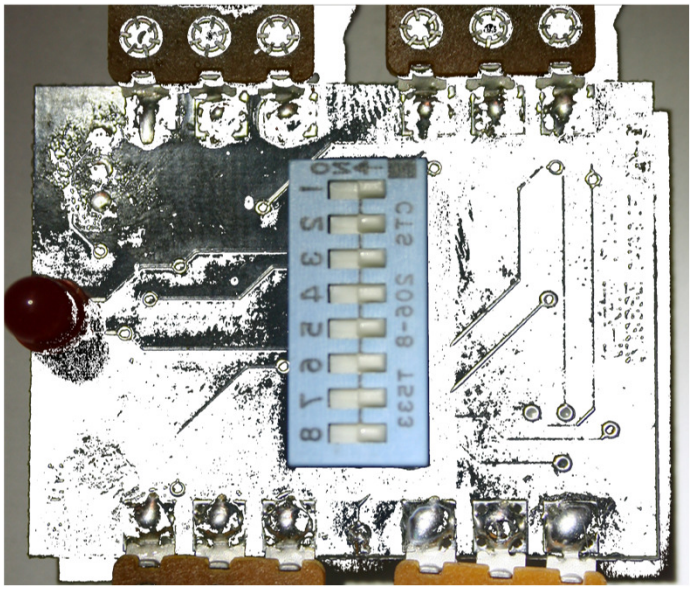

Photo of deconstructed replacement board.
Attempted mirror image of reverse (top) side for traces and mapping vias.

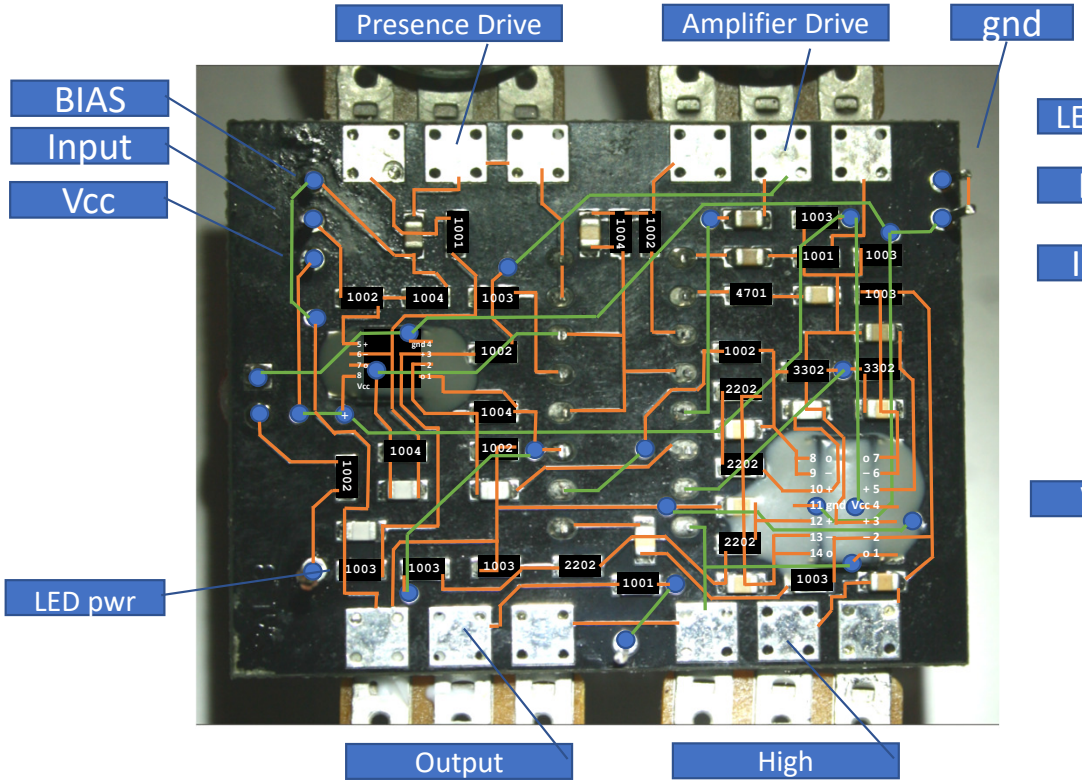

Comparison of replacement board to original (from original Japanese board?)

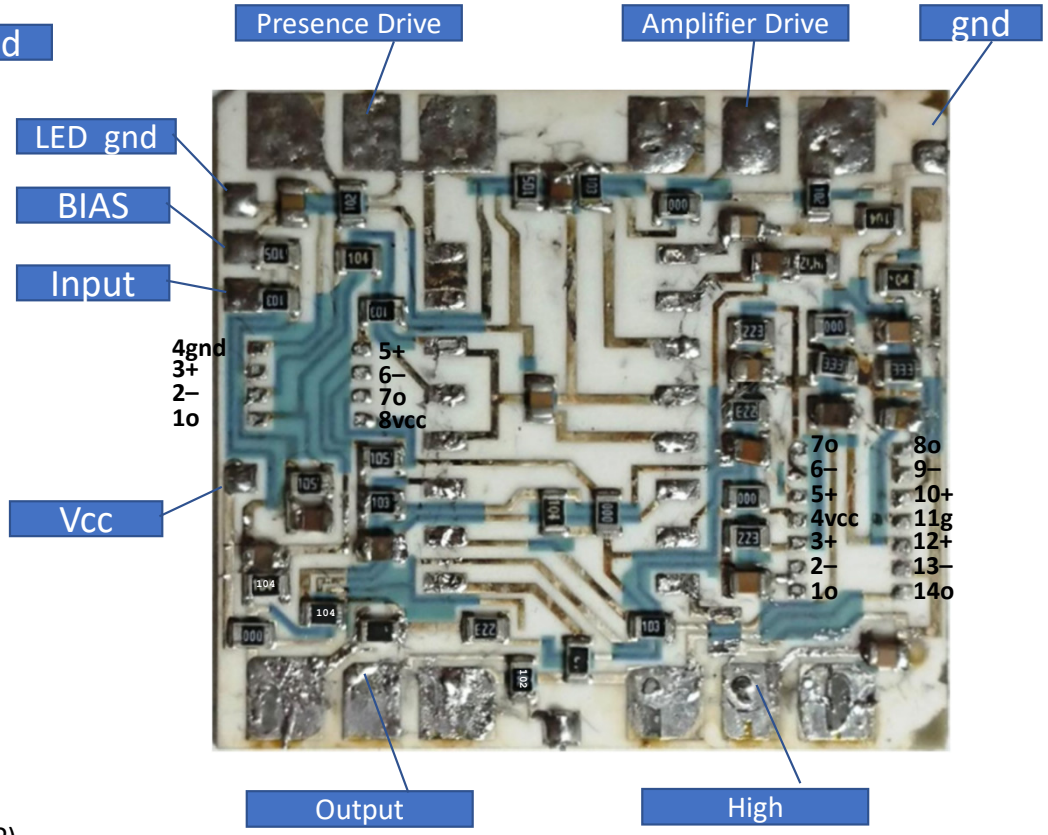

Mirror copy of original board to match new one
Resistor values mirrored back for readability
OpAmps are now backwards (sorry)

3 Nov 2024 Destructive analysis & measurement – white values verified
LED gnd, BIAS, input, Vcc tabs corrected on Japanese board

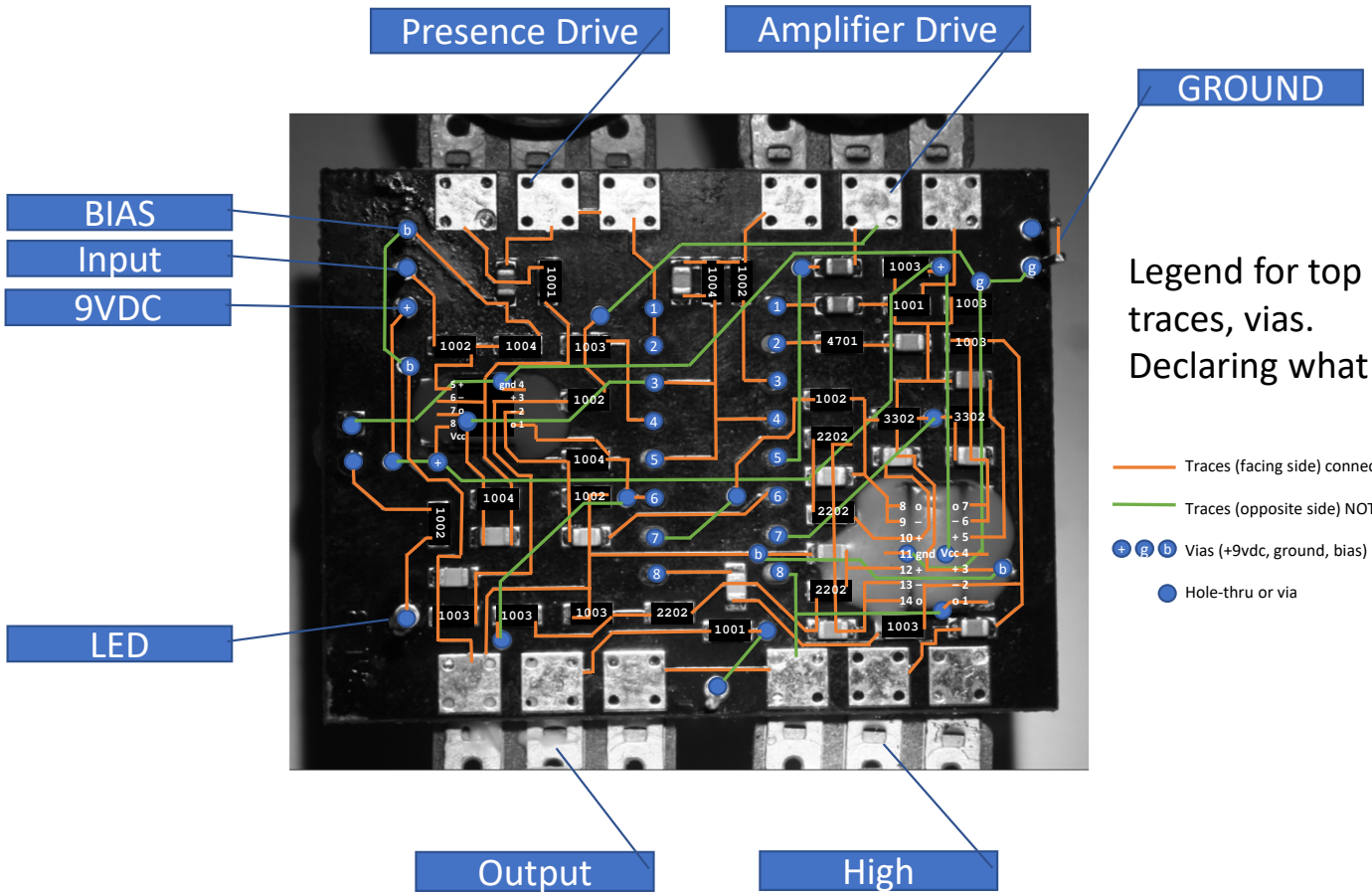

Legend for top and bottom traces, vias.
Declaring what each via is.

Traces (facing side) connected to SMD

Traces (opposite side) NOT connected to SMD

Vias (+9vdc, ground, bias)

Hole-thru or via

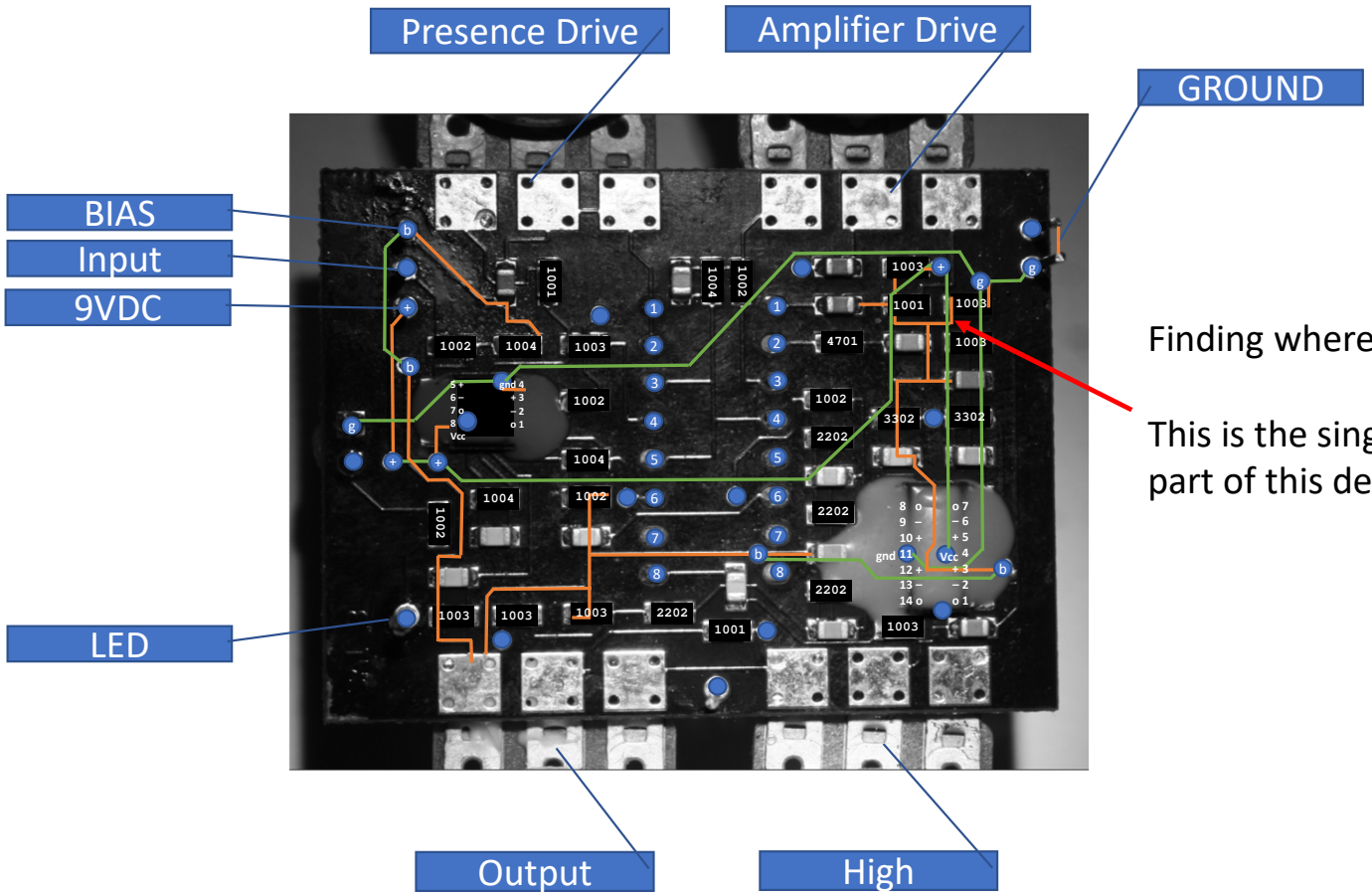

Finding where the Bias is set.

This is the single most frustrating part of this design.

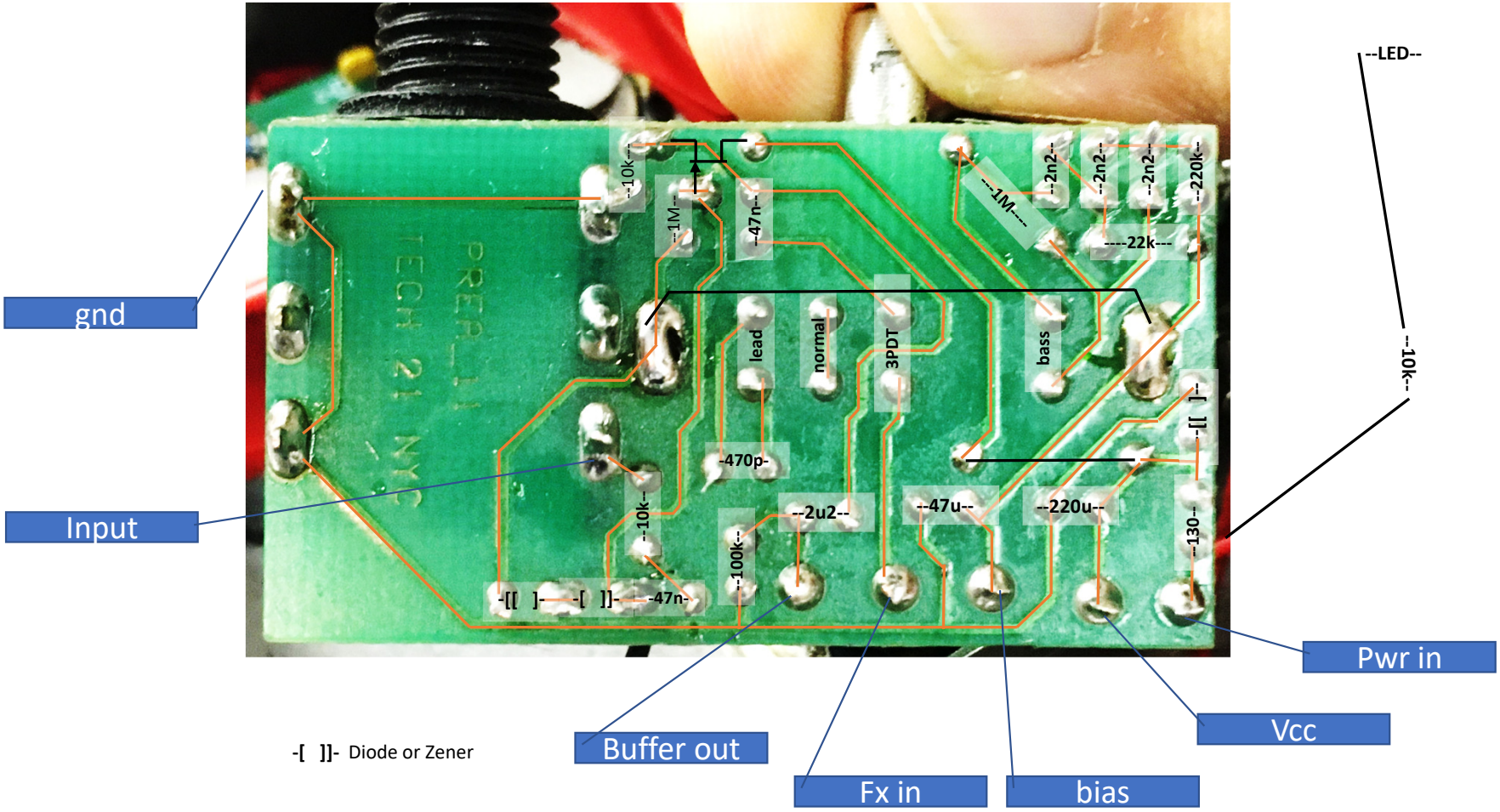
gnd
Input
--10k--
--1M--
--47n--
--1M----
--2n2--
--2n2--
--2n2--
--220k--
----22k---
lead
normal
3PDT
bass
-[[ ]]-
-470p-
--10k--
--2u2--
--47u--
--220u--
--100k--
--130--
-[[ ]]-
-[ ]]-
-47n-
--LED--
--10k--
Pwr in
Vcc
bias
Fx in
Buffer out
-[ ]]- Diode or Zener

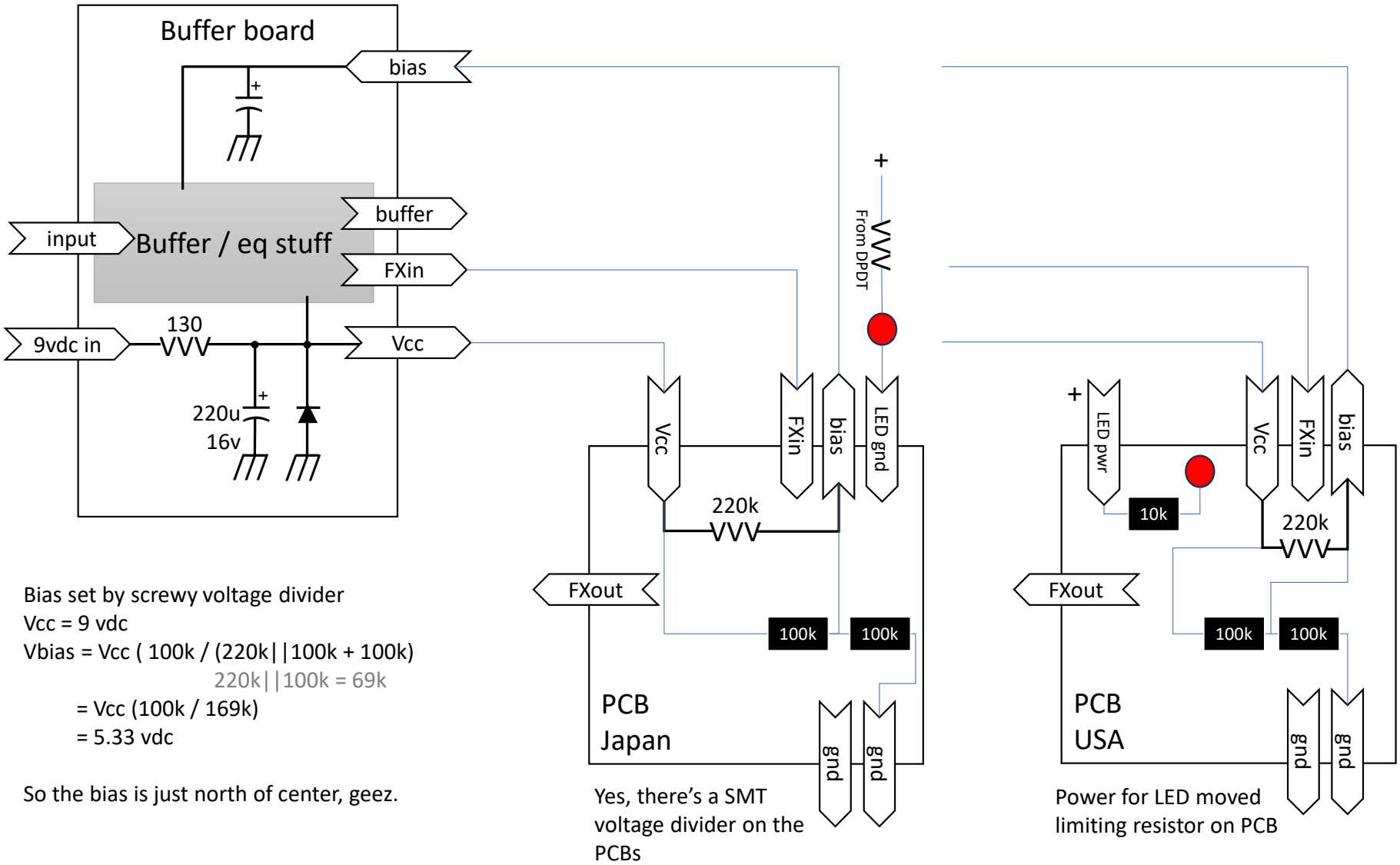

Bias set by screwy voltage divider
Vcc = 9 vdc
Vbias = Vcc (100k / (220k||100k + 100k)
220k||100k = 69k
= Vcc (100k / 169k)
= 5.33 vdc

So the bias is just north of center, geez.

Yes, there's a SMT voltage divider on the PCBs

Power for LED moved limiting resistor on PCB

Ignore 220k here…

Dual and quad opamp pins are different on Japan and Usa models. Small table inset for +/- inputs and o output
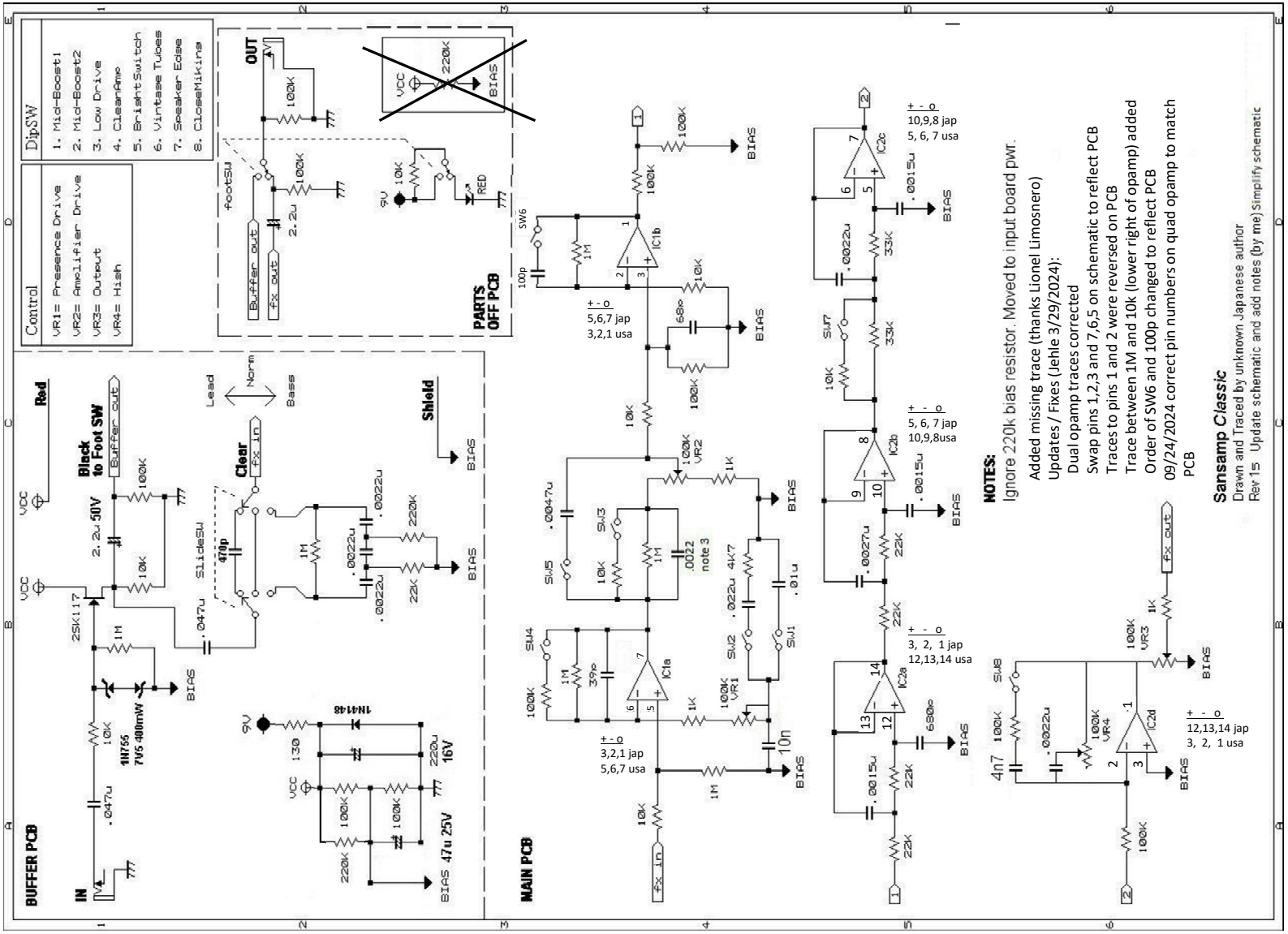
Simplified power supply with the devil's voltage divider, 220k moved… all in one place…